CROSSOVER 60-150

60T LIFTING CAPACITY
TRUCK CRANE MOUNTED ON COMMERCIAL CHASSIS

FEATURES

- 60 US TON @ 10FT
- 150-FOOT FULL POWER MAIN BOOM
- 160-FOOT TIP HEIGHT
- 32-49 FT OPTIONAL TWO-PIECE JIB
- 209 FT MAXIMUM TIP HEIGHT WITH 49 FT JIB
- TILTING OPERATOR CAB (0-18 DEGREES)
- ELECTRONIC RATED CAPACITY INDICATOR
- LK-1 CONTROL SYSTEM WITH SPEED-SELECT

DIMENSIONS
ROAD LAYOUT AND WEIGHTS

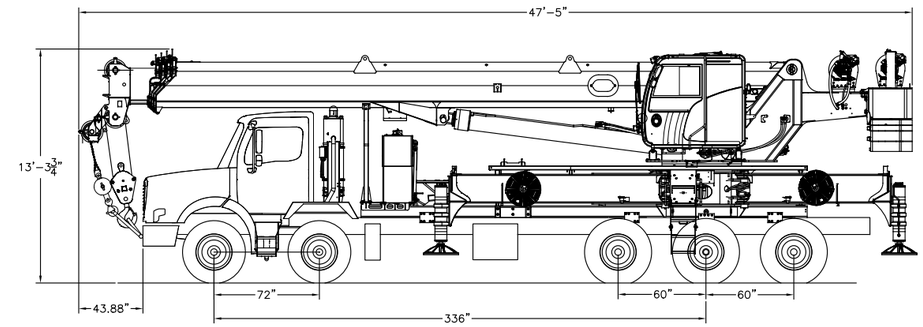

	FRONT AXLES LOAD	REAR AXLES LOAD	TOTAL WEIGHT
BARE CHASSIS (INCLUDES 120 GAL. FUEL)	15,832 LBS	11,917 LBS	27,449 LBS
FULL CWT., JIB, AUX WINCH, AUX WINCH HEAD	28,482 LBS	70,417 LBS	98,893 LBS
8000 LBS CWT ON STORAGE RACK	35,362 LBS	63,531 LBS	98,893 LBS
NO CWT (-12,000 LBS), NO JIB	31,055 LBS	52,924 LBS	83,979 LBS

WEIGHTS AS SHOWN (WITH FULL FUEL AND DRIVER AND PASSENGER)

LOAD CHART
MAIN BOOM 360°

Standard ASME B30.5

Radius in feet	Boom length in feet												
	38	40	50	60	70	80	90	100	110	120	130	140	150
10	120,000	49,050	48,200										
12	120,000	49,050	48,200	48,250	47,850								
15	109,950	49,050	48,200	48,250	47,850	48,050	47,900						
20	89,700	49,050	48,200	48,250	47,850	46,300	42,500	38,250	34,000				
25	73,800	49,050	48,200	48,250	44,350	40,550	37,200	33,100	29,600	26,950			
30	50,850	49,050	48,200	44,350	39,600	35,850	32,450	28,850	26,000	23,600	21,550	19,650	
35			39,100	39,800	35,500	31,900	28,500	25,500	23,350	21,150	19,300	17,600	16,050
40			30,350	31,000	31,350	28,350	25,450	23,400	21,000	19,100	17,350	16,050	14,850
45				24,850	25,200	25,550	23,150	21,050	18,850	17,350	16,000	14,400	13,150
50				20,350	20,700	21,100	21,100	19,150	17,150	15,750	14,350	12,950	11,700
55					17,250	17,600	17,900	17,300	15,950	14,300	13,000	11,650	10,450
60					14,500	14,850	15,150	15,400	14,400	12,950	11,700	10,600	9,500
65						12,650	12,900	13,150	13,150	11,950	10,650	9,650	8,700
70						10,800	11,050	11,300	11,450	10,900	9,800	8,800	8,200
75							9,500	9,700	9,900	10,000	9,050	8,400	7,500
80							8,150	8,400	8,600	8,750	8,450	7,750	6,850
85								7,250	7,450	7,600	7,800	7,150	6,350
90								6,250	6,450	6,600	6,800	6,550	5,850
95									5,550	5,750	5,900	6,050	5,450
100									4,750	4,950	5,150	5,300	5,000
105										4,250	4,450	4,600	4,650
110										3,650	3,800	3,950	4,000
115											3,250	3,400	3,450
120											2,700	2,850	2,950
125												2,400	2,450
130												1,950	2,050
135													1,650
140													1,300